SPECIAL HOT WATER TANKS

COMBINED STRATIFIED TANKS

KWS 500
KWS 800
KWS 1000
KWS 1500
KWS 800 R2
KWS 1000 R2
KWS 1500 R2

Austria Email

COMBINED STRATIFIED TANKS KWS

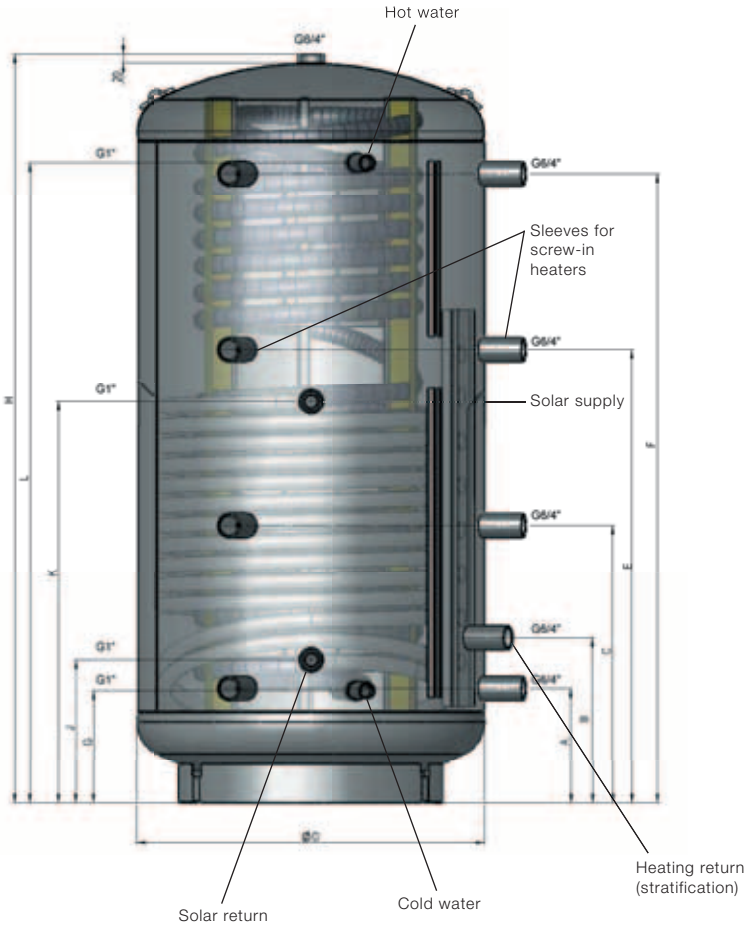

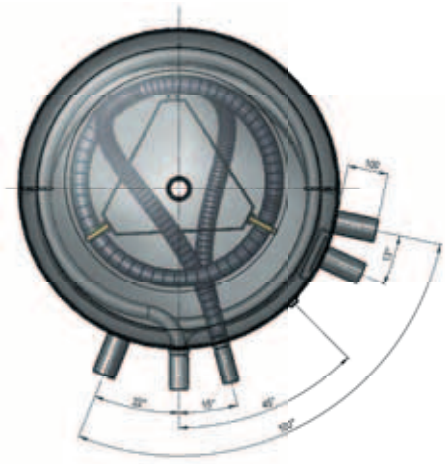

- High-quality fixing for the stainless steel corrugated pipe
- Large heat exchanger for connection to a solar energy system
- Stratification device for energy-efficient stratification of heating return
- For the product Type KWS 800 / 1000 R2 there are 2 off $^{6}/_{4}$“ screw-in sockets for the option of additional electric immersion heaters
- It is possible to connect another buffer tank in series (cascade connection)
- Operating pressure: corrugated pipe 6 bar, buffer tank 3 bar, heat exchanger 10 bar
- New 100 mm ECO SKIN 2.0 insulation

Model	Buffer tank capacity in litres	Dimensions in mm without insulation											Diagonal height	Corrugated pipe (m²)	Heat exchanger surface (m²)	Capacity of stainless steel corrugated pipe	Installed length of screw-in heater sleeve	Standby energy consumption kWh/24h*
		H	ø D	A	B	C	E	F	G	J	K	L						
KWS 500	500	1640	650	220	335	620	1010	1390	220	290	740	1425	1700	5	1,8	25	700	2,6
KWS 800	800	1686	790	260	368	630	1030	1430	255	318	813	1443	1750	6,5	2,5	33	840	3,4
KWS 1000	1000	2036	790	310	418	745	1250	1710	255	318	948	1793	2070	7,5	3,1	39	840	3,8
KWS 1500	1500	2142	1000	380	470	825	1350	1760	306	370	910	1826	2270	7,5	3,5	39	1050	4,5

*Standby energy consumption in kWh/24h according to EN 12897

COMBINED STRATIFIED TANKS KWS R2

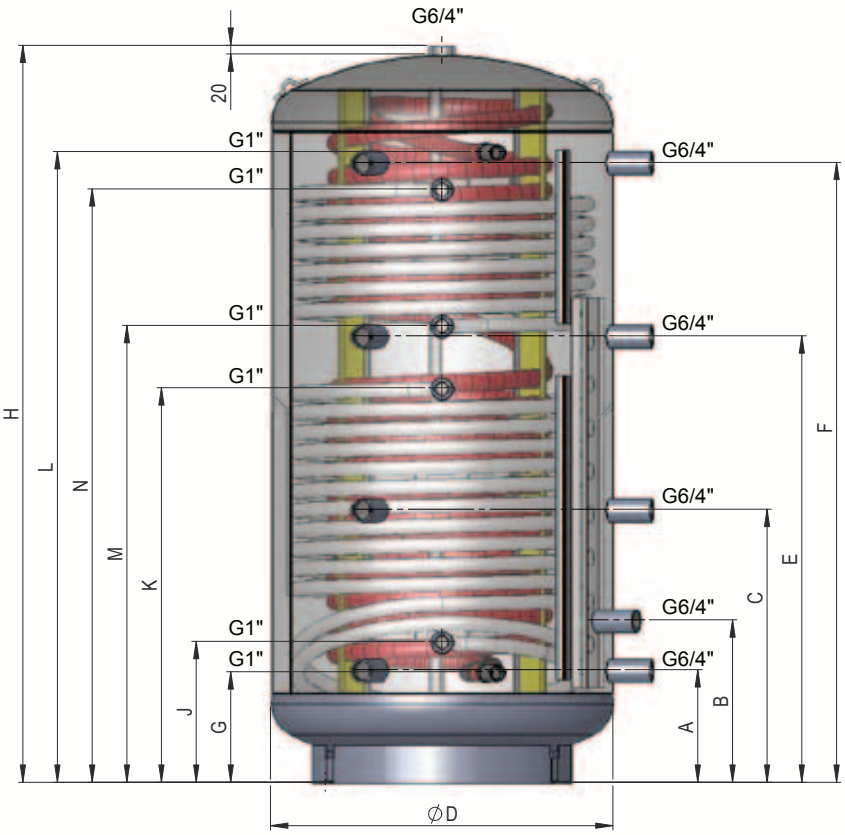

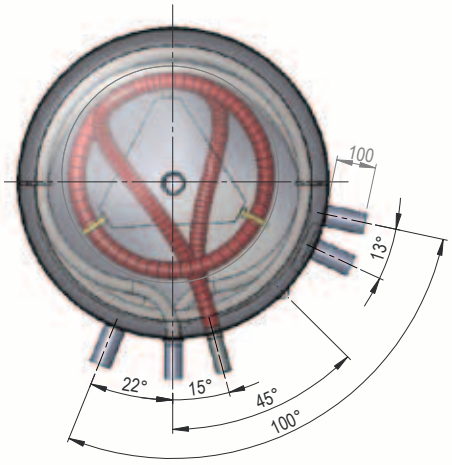

- High-quality fixing for the stainless steel corrugated pipe
- Two large heat exchangers for connection to a solar energy system and a second heating source
- Stratification device for energy-efficient stratification of heating return
- For the product Type KWS 800 / 1000 R2 there are 2 off $^{6}/_{4}$“ screw-in sockets for the option of additional electric immersion heaters
- It is possible to connect another buffer tank in series (cascade connection)
- Operating pressure: corrugated pipe 6 bar, buffer tank 3 bar, heat exchanger 10 bar
- New 100 mm ECO SKIN 2.0 insulation

Model	Buffer tank capacity in litres	Dimensions in mm without insulation													Diagonal height	Corrugated pipe (m^2)	Heat exchanger surface (m^2)	Capacity of stainless steel corrugated pipe	Installed length of screw-in heater sleeve	Standby energy consumption kWh/24h*
		H	ø D	A	B	C	E	F	G	J	K	L	M	N						
KWS 800 R2	800	1686	790	260	368	630	1030	1430	255	318	813	1443	1064	1379	1750	6,5	2,5+1,6	33	840	3,6
KWS 1000 R2	1000	2036	790	310	418	745	1250	1710	255	318	948	1793	1284	1734	2070	7,5	3,1+2,4	39	840	3,9
KWS 1500 R2	1500	2142	1000	380	470	825	1350	1760	306	370	910	1826	1310	1760	2270	7,5	3,5+2,4	39	-	4,7

*Standby energy consumption in kWh/24h according to EN 12897

WE MANUFACTURE IN AUSTRIA AND DELIVER TO EUROPE

© www.agentur-scharf.at – 237.261 – 130829 – KWS – Printed on environmentally friendly paper free from chlorine. Technical changes and misprints reserved.

Head office and factory: Austria Email AG
A-8720 Knittelfeld, Austriastrasse 6
Phone (03512) 700-0, Fax (03512) 700-239
Internet: www.austria-email.at
E-mail: office@austria-email.at

Customer Service: Phone (03512) 700-297
E-mail: kundendienst@austria-email.at

Sales offices:

Vienna, Lower Austria, Burgenland
A-1230 Wien, Zetschegasse 17
Phone (01) 6150727, Fax (01) 6150727-260
E-mail: tvondal@austria-email.at

Styria, Carinthia, East Tyrol
A-8053 Graz, Dr. Heschlweg 6
Phone (0316) 271869, Fax (0316) 273126
E-mail: gbretterklieber@austria-email.at

Upper Austria, Salzburg
A-4600 Wels, Gärtnerstrasse 17
Phone (07242) 45071, Fax (07242) 43650
E-mail: akweton@austria-email.at

Tyrol, Vorarlberg
A-6020 Innsbruck, Etrichgasse 24
Phone (0512) 347951, Fax (0512) 393353
E-mail: hruepp@austria-email.at

Sales offices Germany:

Germany North/East
D-14770 Brandenburg, Beetzseeufer 3
Phone 0049/(0)3381 / 766-0
Fax 0049/(0)3381 / 766-244
E-mail: sgobi@austria-email.at

Germany South
D-92637 Weiden/Opf., Parksteiner Strasse 49
Phone 0049/(0)961 / 63 490-0
Fax 0049/(0)961 / 63 490-30
E-mail: ahirmer@austria-email.at

Austria Email